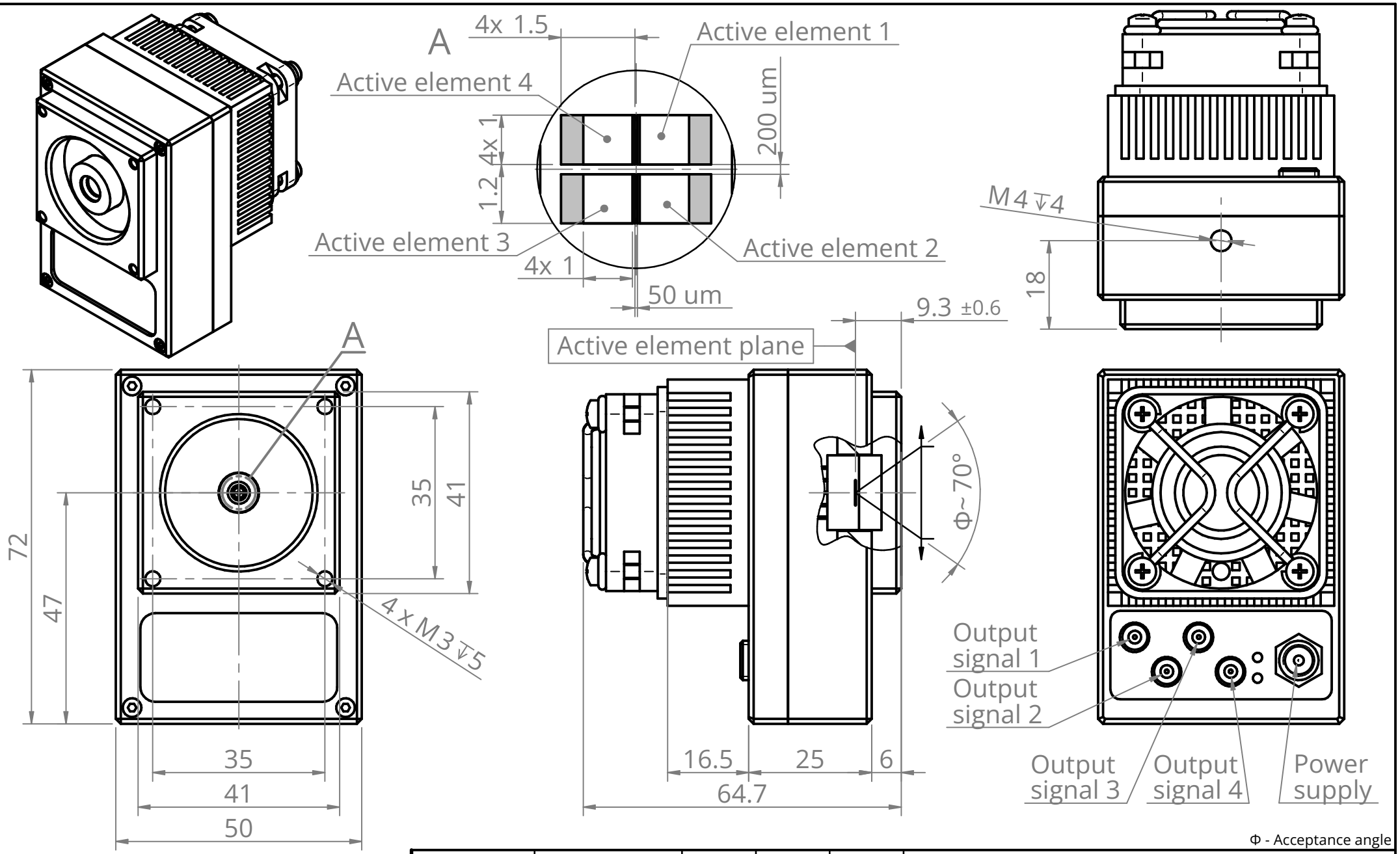

Φ - Acceptance angle

FIRST ANGLE PROJECTION	UNIT: mm GENERAL TOLERANCE: ISO 2768-mK	Scale 1:1	Sheet 1/1	Size A4	This document is the property of VIGO Photonics S.A. and may not be disclosed to third parties, copied or used in whole or in part for any purpose without written permission from VIGO Photonics S.A.
Date 1.09.2025	Drawing No. QM-10.6		Rev. 3	Title QM-10.6 detection module	VIGO PHOTONICS